Complete 1-channel system interface unit for ultra-stable, high precision fluxgate technology current transducers

Features

- 1 channel through D-sub-connector
- ±15 V, 1.2 A DC supply output
- Universal mains input
- Measurement read out through 4mm banana connector
- Power and status LEDs on front

Description

Low noise power supply and interface unit with industry standard D-sub-9 connector for interfacing a range of DC current transducers (DCCTs). With current read out through banana connectors it makes precision current measurement easy and convenient.

Housed in a compact metal case and powered by universal mains, the DSSIU-1 is a reliable and complete solution for implementation of fluxgate current sensing technology.

Applications

- Fluxgate DCCTs
- Hall effect DCCTs
- Power measurement
- Electric vehicle (EV) test bench
- Power measurement and power analysis
- Particle accelerators
- Current calibration purposes
- Precision current sensing

Ihr Ansprechpartner / Your Partner:

dataTec AG
E-Mail: info@datatec.eu
datatec.eu

Electrical specifications at 23 °C, V_S = ± 15 V supply voltage

Parameter		Symbol	Unit	Min	Typ.	Max	Comment
AC Input Voltage		V_{AC}	V_{RMS}	100		250	
AC Input Current	115 V	I_{AC}	A_{RMS}		0.2		
AC Input Current	230 V	I_{AC}	A_{RMS}		0.1		
AC Input Frequency		f	Hz	50		60	
DC Input Voltage		V_{DC}	V	120		250	
Output Voltage		U_{cc}	V_{DC}	±14.5		±15.5	
Output Current		I_{cc}	A			1.2	
Output Voltage Ripple			mV_{RMS}		2.5		No load
Full Operating temperature range		T_a	°C	-20		40	To full rated output current
Limited Operating temperature range		T_a	°C	-20		50	Up to 800 mA output current
Storage temperature range			°C	-20		85	
Relative humidity			%	20		80	Non-condensing
Altitude			m			2000	
Usage							Designed for indoor use
Pollution degree						2	
Ingress protection rating						IP20	
Mass			kg		0.5		
Dimensions			mm		130 x 116 x 56		
EMC standard							EN 61326-1:2013-2021
Safety standard							IEC 61010-1:2010/A1:2019

Intended use

⚠ To ensure safety protection, only use the device as described by the manufacturer

The DSSIU-1 is designed to power current transducers such as Danisense DT, DS, DQ, DN and DM series or similar.
Please see the product manual: https://danisense.com/user-manual.

- Cleaning only with a damp cloth
- Power/unpower the device by plugging/unplugging the mains power cord
- Always keep mains power cord accessible

Connections

- (Front) D-sub-9 connector for connecting the transducer cable with the DSSIU-1
- (Front) RED 4 mm banana connector for connecting the positive (+) current or voltage reading from the transducer
- (Front) BLACK 4 mm banana connector for connecting the negative (-) current or voltage reading from the transducer
- (back) 3 pole IEC mains power connector
- (back) 4 pin connector to read STATUS and TEDS signals fed through from the transducer

Instruction for use

1. Do not power up the device before all cables are connected.

2. Place the primary conductor through the aperture of the transducer.
3. Connect a D-sub-9 cable between DSSIU-1 and sensor.
4. Connect a low impedance amperemeter, measuring resistor or power analyzer on the output (4mm red and black connectors).
5. If using a transducer with direct measuremnent output from the transducer housing (DS600UB-10V or similar), AVOID connecting to the black and red bananas on the front of the DSSIU-1.
6. When all connection are secured - connect mains power.
7. Apply primary current.

LEDs

The two front panel LEDs indicate 1) the DSSIU-1 is powered. 2) the status signal (if available) from the connected transducer is OK.

Pin out description

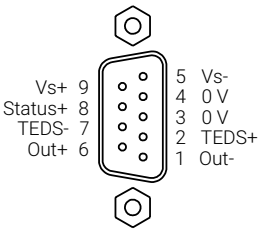

Figure 1: D-sub-9 female connection pinout

1	Out-	Measurement output negative terminal
2	TEDS+	Positive TEDS terminal
3	0 V	0 V reference voltage
4	0 V	0 V connection for supply voltage
5	V_S-	Negative supply voltage
6	Out+	Measurement output positive terminal
7	TEDS-	Negative TEDS terminal
8	Status+	Status signal positive terminal (referred to 0V)
9	V_S+	Positive supply voltage

Status signal and LED

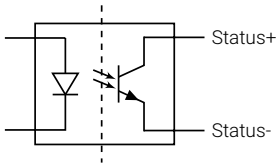

Figure 2: Status signal optocoupler

When the sensor is operating in normal condition the status pins (Status+ and Status-) are shorted by an optocoupler and the green status LED is ON, see Fig. 2. When a fault is detected, or the power is off, the status pins are opened and the green status LED is OFF. Status signal optocoupler ratings found below:

Forward direction:	Status+ to Status- (Pin 8 to pin 3)
Maximum forward current:	10 mA
Maximum forward voltage:	60 V
Maximum reverse voltage:	5 V

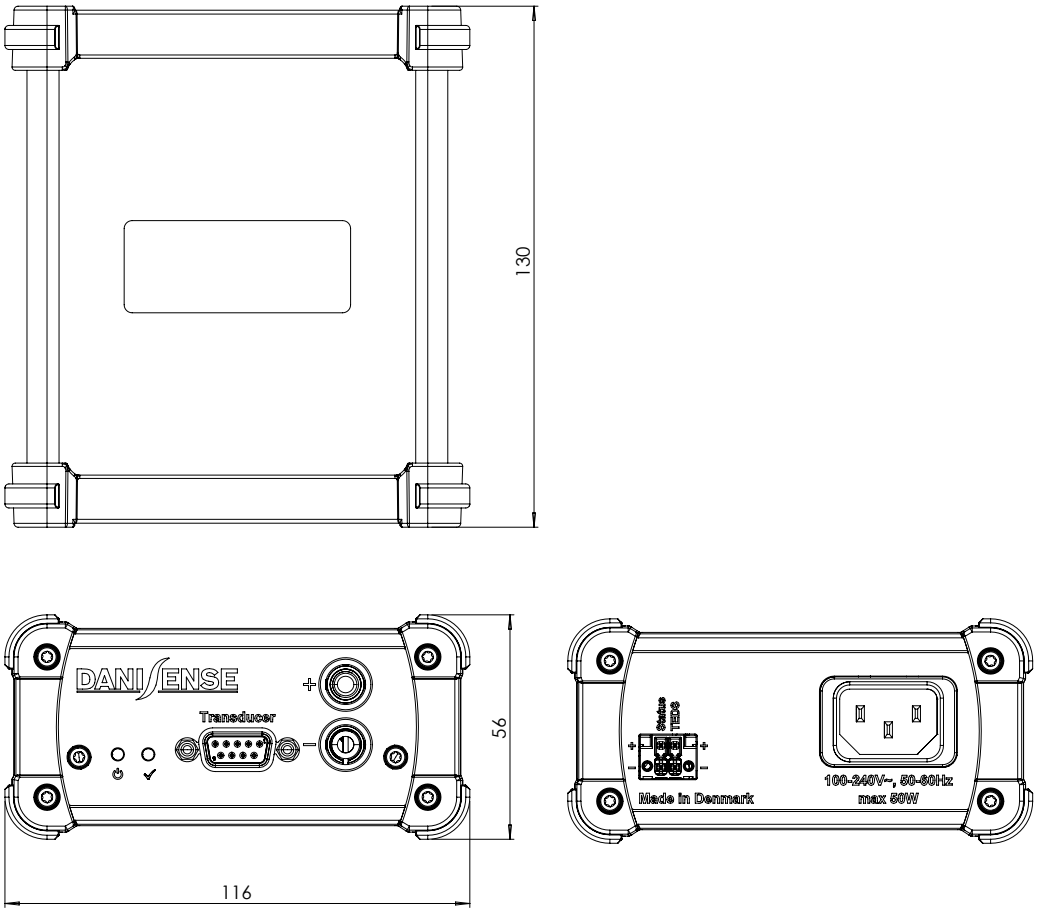

Figure 3: Box dimensions

Declaration of Conformity

Danisense A/S
Malervej 10
DK-2630 Taastrup
Denmark

Declares that under our sole responsibility that this product is in conformity with the provisions of the following EC Directives, including all amendments, and with national legislation implementing these directives:

Directive 2014/30/EU
Directive 2014/35/EU

And that the following harmonized standards have been applied

EEN 61010-1 (Third Edition):2010, EN 61010-1:2010/A1:2019
EN 61010-2-030:2021/A11:2021
EN 61326-1:2013

All DANISENSE products are manufactured in accordance with RoHS directive 2011/65/EU. Annex II of the RoHS directive was amended by directive 2015/863 in force since 2015, expanding the list of 6 restricted substances (Lead, Hexavalent Chromium, PBB, PBDE and Cadmium)

Danisense follows the provision in EN 63000:2018

Place		Date
Taastrup, Denmark	Henrik Elbæk	2022-03-15

dataTec
Mess- und Prüftechnik. Die Experten.

Ihr Ansprechpartner /
Your Partner:

dataTec AG
E-Mail: info@datatec.eu
datatec.eu