High precision fluxgate AC/DC current transducer for galvanically isolated measurement up to 750 A

Features

- 500 A rms nominal current
- 2V output at 500 A through BNC connector
- 24/30 mm aperture with/without plastic insert
- 10 MHz bandwidth
- 12.5 ns phase delay
- 15 ppm linearity
- 15 ppm offset
- Dedicated power supply included

Description

High precision wide bandwidth DC current transducer (DCCT) measuring up to 750 A currents and continuously measuring 500 A currents with a linearity error less than 15 ppm.

Using a special high frequency transducer head, the DW500UB-2V has a very wide bandwidth up to 10 MHz. Phase compensation is made easy thanks to a near constant phase delay of around 12.5 ns, including a 2m coax cable.

Based on the ultra stable Danisense closed loop flux gate technology, the DW500UB-2V has very low offset and ultra low drift.

Built in a compact aluminium housing, it provides high resolution for precise monitoring, reliable and consistent performance, and a rugged design for durability.

Applications

- Electric vehicle (EV) test bench
- High frequency applications
- Power measurement and power analysis
- Precision drives
- Battery testing and evaluation systems
- Wide bandgap (WBG) SiC and GaN devices
- Current calibration

Ihr Ansprechpartner / Your Partner:

dataTec AG
E-Mail: info@datatec.eu
datatec.eu

Mess- und Prüftechnik. Die Experten.

Electrical specifications at 23 °C

Parameter		Symbol	Unit	Min	Typ.	Max	Comment
Nominal primary AC current		$I_{PN\ AC}$	Arms			500	Refer to Fig. 2 for derating
Nominal primary DC current		$I_{PN\ DC}$	A	-500		500	Refer to Fig. 2 for derating
Measuring range		$\hat{I}_{PM}$	A	-750		750	Refer to Fig. 2 for derating
Nominal secondary voltage		V_O	V	-2		2	At nominal primary DC current
Transfer ratio		k	A/V	250		250	$I_{primary}/V_{secondary}$
Output resistance			Ω	49	50	51	
Linearity error		ϵ_L	ppm	-15	±10	15	ppm refers to reading. See Fig. 3
Ratio error			ppm	-50	±20	50	ppm refers to reading
Ratio temperature coefficient			ppm/K	-3	±1	3	ppm refers to reading
Ratio stability			ppm/month		±10		ppm refers to reading
Offset (including earth field)			ppm	-15	±5	15	ppm refers to $I_{PN\ DC}$
Offset temperature coefficient			ppm/K	-0.2	±0.1	0.2	ppm refers to $I_{PN\ DC}$
Offset stability over time			ppm/month	-0.3		0.3	ppm refers to $I_{PN\ DC}$
Bandwidth		f(±3dB)	MHz		10		Small signal. See Fig. 4
Response time to a step current I_{PN}		t_r	µs		1		At 90% of I_{PN}. di/dt = 100 A/µs
Total accuracy without offset		ϵ_{tot}		*% of reading + % of full scale*			Full scale refers to $I_{PN\ DC}$.
	<10 Hz			0.005 + 0.0015			For details, see Reading and full scale
	<100 Hz			0.02 + 0.0015			
	<1 kHz			0.1 + 0.0015			For other frequencies, see Linear interpolation of accuracy specification.
	<10 kHz			0.25 + 0.0015			
	<100 kHz			0.5 + 0.002			
	<1MHz			1 + 0.003			
	<10MHz			30 + 0.005			
Phase shift	<10 Hz				0.001°		Without phase compensation
	<100 Hz				0.01°		Using 2 m RG58 coax cable
	<1 kHz				0.15°		See Fig. 4
	<10 kHz				0.15°		
	<100 kHz				1°		See BNC Cable Length for details
	<1MHz				6°		
	<10MHz				60°		
RMS noise	<10 Hz		ppm rms		0.1	0.2	ppm refers to $I_{PN\ DC}$
	<100 Hz				0.3	1	
	<1 kHz				0.3	1	
	<10 kHz				0.3	1	
	<100 kHz				2	4	
Peak-to-peak noise	<10 Hz		ppm p-p			1	ppm refers to $I_{PN\ DC}$
	<100 Hz					4	
	<1 kHz					4	
	<10 kHz					7	
	<100 kHz					30	
Fluxgate excitation frequency		f_{exc}	kHz		31.25		
Power supply voltages			Vrms	85		265	50-60 Hz
Power supply AC input frequency			Hz	50		60	
Power supply AC nominal current			A			0.3	
Offset change with external magnetic field			ppm/mT		1.3	3.5	ppm refers to nominal current

1 ppm nominal = 2 μV secondary voltage.

Linearity error

Linearity error is defined as the deviation from a straight line. The straight line is a linear regression trend line based on the least squares method of the measurement points from 0 to positive max current and another trendline is calculated from 0 to negative max current. The difference between each measured point and the linear trend line is the linearity error. The linearity error ϵ_L can be expressed as (1), where $I_{reading}$ is the measurement result and I_{fitted} is the regression value.

$$\epsilon_L = I_{reading} - I_{fitted} \tag{1}$$

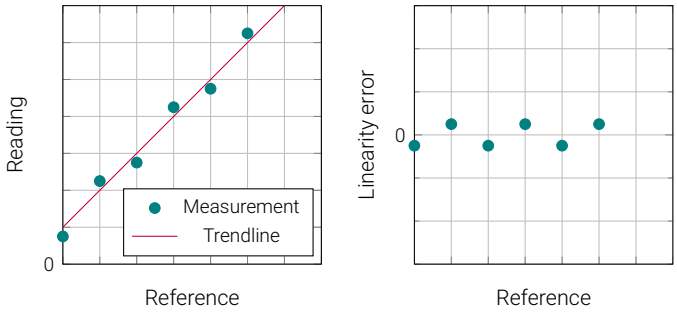

Figure 1: Linearity error definition

Reading and full scale

Reading is the actual value measured at a given time. Full scale is the rated nominal value of the device. If a given current $I_{reading}$ is measured, the total accuracy is calculated as (2). Example: A 500 A rated device has a specification of 0.005% + 0.0015% (reading + full scale) at < 10 Hz, plus an offset of 0.001 % (of full scale). The device is measuring (reading) 10 A dc, and the accuracy is calculated as (3).

$$\epsilon_{tot} = \epsilon_{reading} \cdot I_{reading} + (\epsilon_{fullscale} + \epsilon_{offset}) \cdot I_{PNDC} \tag{2}$$

$$\epsilon_{tot} = 0.005\% \cdot 10\text{A} + (0.0015\% + 0.001\%) \cdot 500\text{A} = 13\text{mA} \tag{3}$$

Primary and secondary current/voltage

The secondary current I_S or voltage V_S is calculated by using the transfer ratio k, as in (4).

$$I_S = \frac{I_P}{k}, \qquad V_S = \frac{I_P}{k} \tag{4}$$

Converting from ppm of nominal to secondary current/voltage

The nominal primary current is the rated current for the device. If ϵ_{ppm} is the error in ppm referred to nominal, use (5) to convert to ampere primary current. If the primary/secondary transfer ratio is k, use (6) to convert to ampere secondary current. If the device has voltage output, use (7)

$$\epsilon_{P_{ampere}} = \epsilon_{ppm} \cdot I_{PNDC} \cdot 1 \times 10^{-6} \tag{5}$$

$$\epsilon_{S_{ampere}} = \epsilon_{ppm} \cdot \frac{I_{PNDC}}{k} \cdot 1 \times 10^{-6} \tag{6}$$

$$\epsilon_{S_{volt}} = \epsilon_{ppm} \cdot \frac{I_{PNDC}}{k} \cdot 1 \times 10^{-6} \tag{7}$$

Linear interpolation of accuracy specification

If the accuracy at a specific frequency is required, it is possible to use linear interpolation between known points. If the frequency f is $f_1 < f < f_2$ and the accuracy at the frequency $\epsilon(f)$ is $\epsilon(f_1) < \epsilon(f) < \epsilon(f_2)$, then the accuracy at f is found as (8).

$$\epsilon(f) = \frac{\epsilon(f_2) - \epsilon(f_1)}{f_2 - f_1}(f - f_1) + \epsilon(f_1) \tag{8}$$

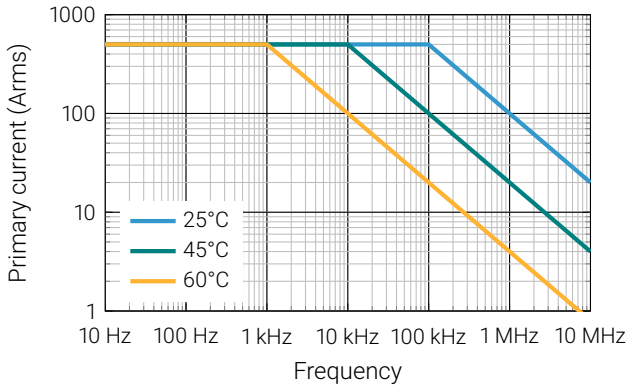

Figure 2: Maximum continuous primary current vs. frequency

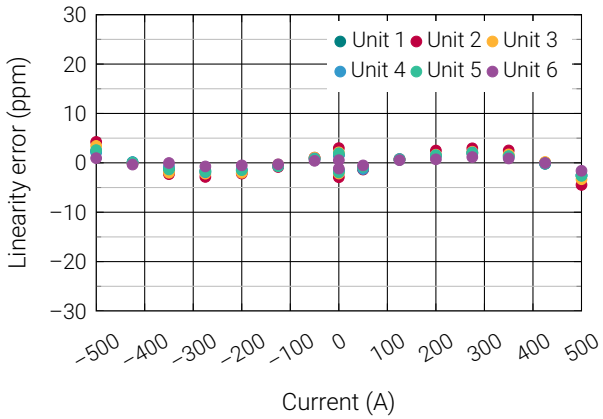

Figure 3: Linearity error of 6 samples

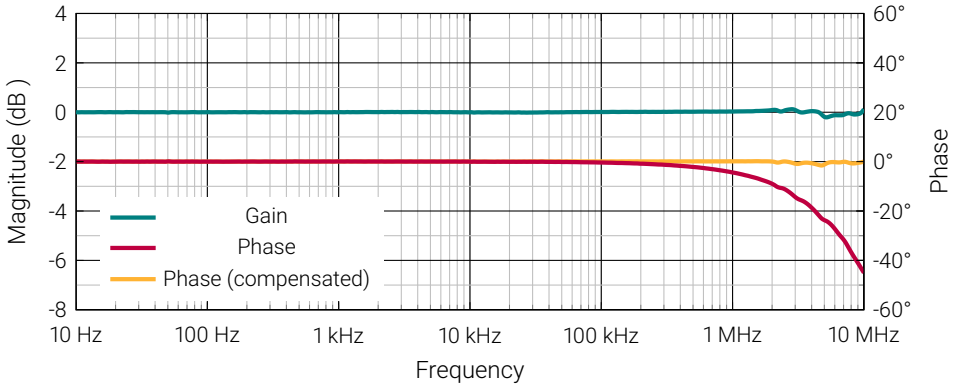

Figure 4: Frequency characteristics with 2m RG58 cable. See Phase Compensation for details.

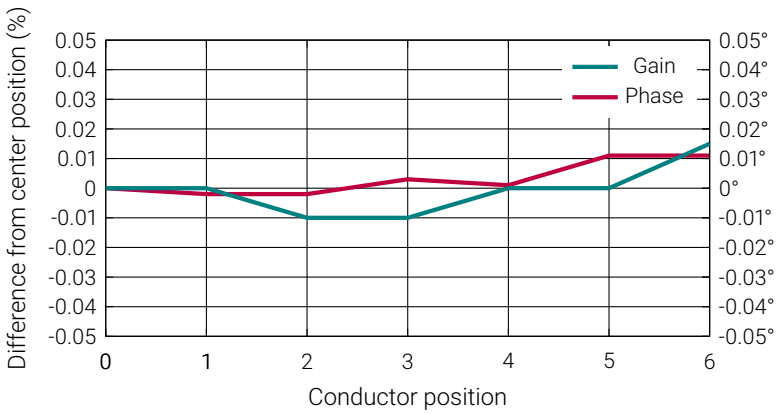

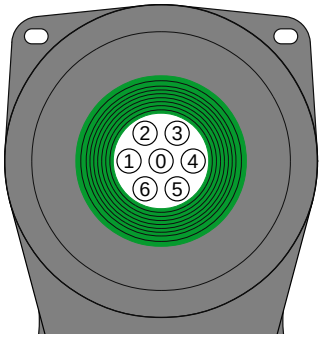

Figure 5: Impact of conductor position at 100 kHz

Isolation specifications according to IEC 61010-1

When using *REINFORCED insulated* wire, all wiring must be insulated for the highest voltage used. When using *BASIC insulated* or *uninsulated* wire, follow the specified voltages in the table below:

Parameter		Unit	Value
Clearance		mm	11.5
Creepage distance		mm	12
Comparative tracking index (CTI)		V	> 600
Continuous working voltage according to IEC 61010-1 with:			
Uninsulated wire:	Non mains	V	1000
	CAT II (dc and rms)		1000
	CAT III (dc and rms)		600
BASIC insulated wire:	Non mains		2000
	CAT II (dc and rms)		1000
	CAT III (dc and rms)		1000
Transient voltage according to IEC 61010-1 with:			
Uninsulated wire:	Non mains	V	5000
	CAT II		9500
	CAT III		9500
BASIC insulated wire:	Non mains		8000
	CAT II		6000
	CAT III		8000

Do not connect the transducer to signals or use for measurements within Measurement Category IV, or for measurements on MAINs circuits or on circuits derived from Overvoltage Category IV which may have transient overvoltages above what the product can withstand. The product must not be connected to circuits that have a maximum voltage above the continuous working voltage, relative to earth or to other channels, or this could damage and defeat the insulation.

Environmental and mechanical characteristics

Parameter	Unit	Min	Typ	Max	Comment
Altitude	m			2000	
Usage					Designed for indoor use
Pollution degree				2	
Operating temperature range	°C	-30		60	
Storage temperature range	°C	-40		85	
Relative humidity	%	20		80	Non-condensing
Mass	kg		2.5		Including carrying case and cables

Connections:	Mains AC cable and BNC connector
Standards:	EMC: EN 61326-1:2013-2021
Cleaning:	The transducer should only be cleaned with a damp cloth. No detergent or chemicals should be used.

Temperature: When multiple primary turns are used or high primary currents are applied the temperature around the transducer will increase, please monitor to ensure that the maximum ratings are not exceeded. It is recommended to have minimum 1 mm^2 per ampere in the primary bus bar.

Transducer Connection - Control Cable

Connect the control cable to the circular connector on the front of the control box.

Mains Connection via C7 Cable

Use the supplied mains cable to connect mains power to the control box. The control box is designed for using universal mains 100-240Vac, 50-60Hz. The product is designed as a Class II product, meaning that it is intended to be used without a safety earth connection.

Chassis and Shield Connection

The chassis of the control box is electrically connected to the sensor head aluminium housing and the BNC shield, see Fig. 6. The screw terminal on the backside of the control box is an optional shield connection reference. This connection may be used if the user wishes to connect the chassis of the control box to an external reference point. For best high frequency performance when using the shield reference, it is recommended to connect the shield reference only to the same physical reference point/GND point as the measurement equipment to which the BNC cable is connected.

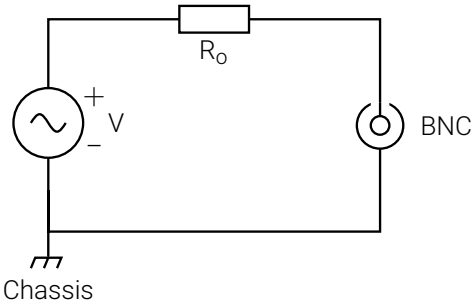

Figure 6: BNC shield and chassis connection

Mounting

The unit can be installed into a fixed installation using the designated mounting holes – see Fig. 8 in the datasheet for drawings of the unit. The mounting holes are the same as used to fasten the rubber feet on the bottom of the control box – the rubber feet can be removed for fixed installation use.

Power on LED ⏻

The Power On LED is indicated with this symbol ⏻. When the LED is ON (green light) it means that mains power is connected, and the control box is powered.

Status LED ✓

The Status LED is indicated with this symbol ✓. When the LED is ON (green light) it means that the cable to the transducer is connected, and the unit is ready for measurements. If the LED is OFF (no green light):

- The cable from the transducer to the control box might not be connected
- The current is out of the measurement range
- Current have been applied to the busbar before powering the unit
- An internal error has occurred

Control Cable

It is important that the 3m cable from the transducer must be connected to the control box before current is applied to the busbar under measurement. The unit may fail if high current is applied before connecting the cable to the powered control box.

Signal Output – BNC

The voltage output signal from the transducer is available from the BNC-type connection with an internal output resistance of 50Ω. It is recommended to use a high impedance (≥1MΩ) analyzer for best precision.

BNC Cable Length

The standard length of the supplied coaxial BNC cable type RG58 is 2m. Other lengths of BNC connection cable may be used. The length of the cable affects the high frequency phase response (delay). Choose a high quality RG58-type coaxial cable if other lengths are required. Phase response or time delay with longer or shorter cables may be compensated by the attached receiving analyzer. BNC cable phase error in degrees (using high impedance input) is calculated as in (9). Where f is the frequency in Hz, l is the cable length in meters and v is signal velocity of the cable.

For a typical RG58 cable, the signal velocity is around $v = 198 \cdot 10^6$m/s corresponding to a delay of 5.05 ns/m.

$$\phi = -\frac{360° \cdot f \cdot l}{v} \tag{9}$$

At 1 MHz with 2m RG58 cable:

$$\phi = -\frac{360° \cdot 10^6\text{Hz} \cdot 2\text{m}}{198 \cdot 10^6\text{m/s}} = -3.64° \tag{10}$$

At 10 MHz with 2m RG58 cable:

$$\phi = -\frac{360° \cdot 10 \cdot 10^6\text{Hz} \cdot 2\text{m}}{198 \cdot 10^6\text{m/s}} = -36.4° \tag{11}$$

Phase Compensation

The DW500UB-2V has a phase shift of around -4.5°at 1 MHz using a 2m RG58 coax cable. This corresponds to a time delay of 12.5 ns. For the most accurate phase compensation, use the measured phase delay of the specific unit.

Isolation Plastic Ring

The current transducer is constructed with an isolation plastic ring to ensure specified insulation to the busbar. It is possible to remove the plastic isolation ring to obtain a larger aperture by clicking the two parts apart with two fingers.

⚠ IMPORTANT: If the isolation ring is removed, the user must ensure proper electrical insulation of the busbar to meet the safety requirements to avoid electric shock. The isolation ring can be stored in the product carrying case.

Measuring at High Frequencies

See application note on high frequency current measurement on our website: https://danisense.com/wp-content/uploads/Current-Measurements-at-High-Frequencies.pdf

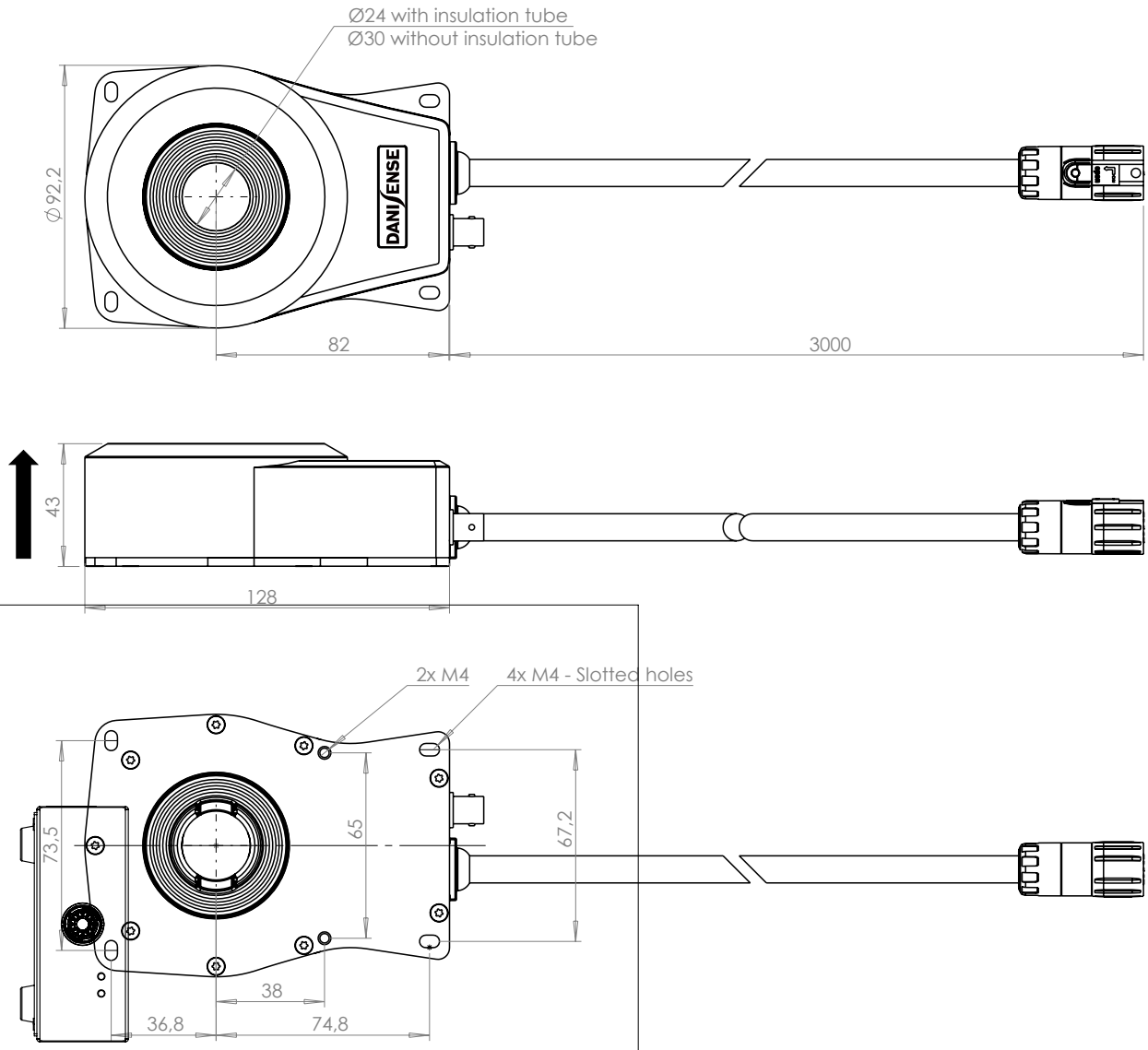

Figure 7: Dimensions of sensor head. Tolerance is 0.3 mm

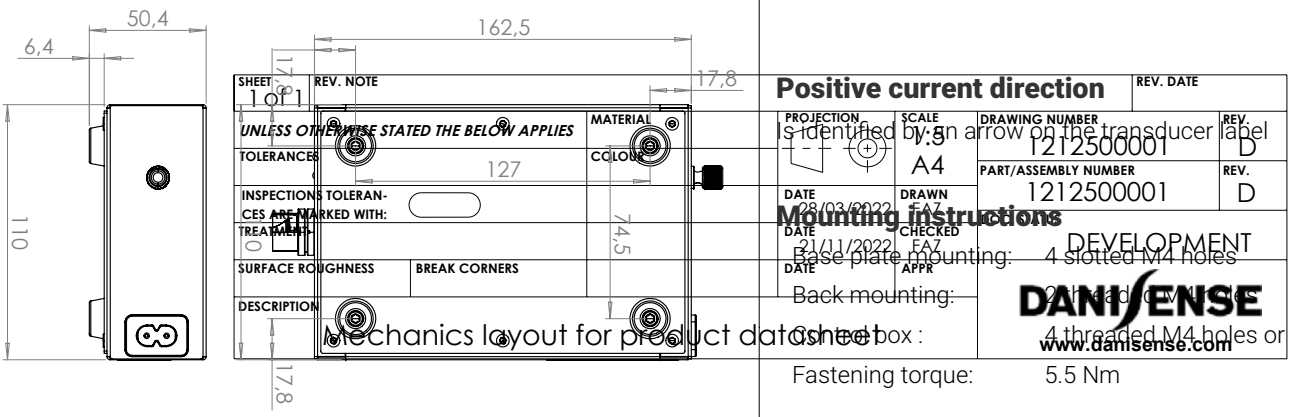

Figure 8: Dimensions of control box. Tolerance is 0.3 mm

Mounting instructions

Base plate mounting: 4 slotted M4 holes

Back mounting: 2 threaded M4 holes

Control box : 4 threaded M4 holes or rubber feet
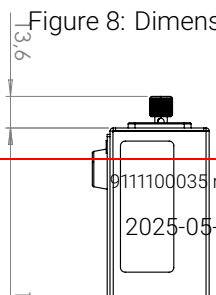
Fastening torque: 5.5 Nm