Compact precision fluxgate AC/DC current transducer for galvanically isolated measurement up to 6000 A

Features

- 4000 A rms nominal current
- 5000:1 primary/secondary current ratio
- Floating current output through 3 pin connector
- 120 mm aperture width
- 200 ppm (0.02%) total accuracy
- 50 ppm linearity
- 100 ppm offset
- Status LED
- Compact plastic housing with anodized alu-plate

CE RoHS 2011/65/EU UKCA

Description

High precision DC current transducer (DCCT) measuring up to 6000 A currents and continuously measuring 4000 A currents with a linearity below 50 ppm and a maximum total error of 200 ppm.

With a turns ratio of 5000:1 the MBC4000I makes high current measurement easy while providing a high accuracy, cost-effective replacement for standard hall effect based current sensors. Based on Danisense closed loop flux gate technology, the MBC4000I has a low offset and drift.

It delivers high resolution for precise monitoring, reliable and consistent performance, and an easy to mount design for built-in accuracy.

Applications

- High Power Solar Inverters
- Battery Energy Storage SoC and SoH
- Energy Metering
- High Power Variable Frequency Drive
- Substation Monitoring & Power Quality
- Wind Power Inverters
- Solid State Transformer
- Uninterruptible Power Supply (UPS)

dataTec
Mess- und Prüftechnik. Die Experten.

Ihr Ansprechpartner / Your Partner:

dataTec AG
E-Mail: info@datatec.eu
datatec.eu

Electrical specifications

Valid after 30 minutes warm up at T_a = 23 °, V_s = ± 24 V, R_M = 1.25 Ω, with conductor distance as in Fig. 9 and no external magnetic field.

Parameter		Symbol	Unit	Min	Typ.	Max	Comment
Nominal primary AC current	Continuous	$I_{PN\ AC}$	Arms			4000	See Fig. 4 for details
Nominal primary DC current	Continuous	$I_{PN\ DC}$	A	-4000		4000	For other values see Fig. 2
Measuring range		I_{PM}	A	-6000		6000	See Fig. 3 & Fig. 4 for details
Overload capacity	Peak	I_{OL}	A			10000	Single pulse 10ms. See Overload capacity
Nominal secondary current	Continuous	I_{SN}	mA	-800		800	At nominal primary DC current
Primary / secondary ratio		k		5000		5000	$I_{primary}/I_{secondary}$
Measuring resistance		R_M	Ω	0	1.25		See Fig. 2 and Fig. 3 for details
Linearity error		ϵ_L	ppm	-50		50	ppm refers to reading
Ratio error			ppm	-100		100	ppm refers to reading
Offset current (including earth field)		I_{OE}	ppm	-100		100	ppm refers to $I_{PN\ DC}$
Offset temperature coefficient		TC_{IOE}	ppm/K	-1		1	ppm refers to $I_{PN\ DC}$
Bandwidth		f(±3dB)	kHz		100		Small signal. See Fig. 5
Response time to a step current I_{PN}		t_r	µs		6		Measured with 10 A/µs at 90%
Total accuracy without offset		ϵ_{tot}		*% of reading + % of full scale*			Full scale refers to $I_{PN\ DC}$
	DC <10 Hz			0.01 + 0.00002			For details, see Reading and full scale
	50-60 Hz			0.01 + 0.00004			
	<1 kHz			0.1 + 0.00004			For other frequencies, see Linear interpolation of accuracy specification
	<10 kHz			3 + 0.00004			
	<100 kHz			30 + 0.002			
Phase shift	DC <10 Hz				0.002°		
	50-60 Hz				0.01°		
	<1 kHz				0.02°		
	<10 kHz				2°		
	<100 kHz				10°		
RMS noise	<10 Hz		ppm rms			0.2	ppm refers to $I_{PN\ DC}$
	<100 Hz					0.2	
	<1 kHz					0.2	
	<10 kHz					0.3	
	<100 kHz					2.8	
Peak-to-peak noise	<10 Hz		ppm p-p			0.8	ppm refers to $I_{PN\ DC}$
	<100 Hz					0.8	
	<1 kHz					1.2	
	<10 kHz					2.2	
	<100 kHz					18	
Fluxgate excitation frequency		f_{exc}	kHz		46.88		
Power supply voltages		V_s	V	±14.5		±25.2	I_{PN} derated to 2200 A at ±14.5 V
Idle current consumption			mA		±80		Primary current = 0 A
Current consumption at nominal current			mA	-880		880	At $I_{PN\ DC}$
Current consumption at max current			mA	-1280		1280	At I_{PM}
Operating temperature range		T_a	°C	-40		85	See Fig. 4
Offset change with earth magnetic field			ppm	-10		10	ppm refers to $I_{PN\ DC}$
Offset change with power supply voltage changes			ppm	-1		1	Within V_s range. ppm refers to $I_{PN\ DC}$

Linearity error

Linearity error is defined as the deviation from a straight line. The straight line is a linear regression trend line based on the least squares method of the measurement points from 0 to positive max current and another trendline is calculated from 0 to negative max current. The difference between each measured point and the linear trend line is the linearity error. The linearity error ϵ_L can be expressed as (1), where $I_{reading}$ is the measurement result and I_{fitted} is the regression value.

$$\epsilon_L = I_{reading} - I_{fitted} \tag{1}$$

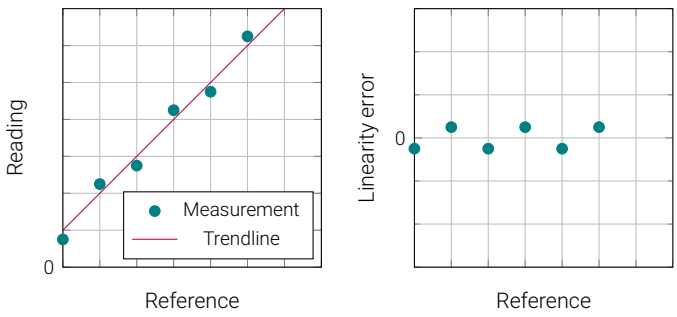

Figure 1: Linearity error definition

Reading and full scale

Reading is the actual value measured at a given time. Full scale is the rated nominal value of the device. If a given current $I_{reading}$ is measured, the total accuracy is calculated as (2). Example: A 500 A rated device has a specification of 0.005% + 0.0015% (reading + full scale) at < 10 Hz, plus an offset of 0.001 % (of full scale). The device is measuring (reading) 10 A dc, and the accuracy is calculated as (3).

$$\epsilon_{tot} = \epsilon_{reading} \cdot I_{reading} + (\epsilon_{fullscale} + \epsilon_{offset}) \cdot I_{PNDC} \tag{2}$$

$$\epsilon_{tot} = 0.005\% \cdot 10\text{A} + (0.0015\% + 0.001\%) \cdot 500\text{A} = 13\text{mA} \tag{3}$$

Primary and secondary current/voltage

The secondary current I_S or voltage V_S is calculated by using the transfer ratio k, as in (4).

$$I_S = \frac{I_P}{k}, \qquad V_S = \frac{I_P}{k} \tag{4}$$

Converting from ppm of nominal to secondary current/voltage

The nominal primary current is the rated current for the device. If ϵ_{ppm} is the error in ppm referred to nominal, use (5) to convert to ampere primary current. If the primary/secondary transfer ratio is k, use (6) to convert to ampere secondary current. If the device has voltage output, use (7)

$$\epsilon_{P_{ampere}} = \epsilon_{ppm} \cdot I_{PNDC} \cdot 1 \times 10^{-6} \tag{5}$$

$$\epsilon_{S_{ampere}} = \epsilon_{ppm} \cdot \frac{I_{PNDC}}{k} \cdot 1 \times 10^{-6} \tag{6}$$

$$\epsilon_{S_{volt}} = \epsilon_{ppm} \cdot \frac{I_{PNDC}}{k} \cdot 1 \times 10^{-6} \tag{7}$$

Linear interpolation of accuracy specification

If the accuracy at a specific frequency is required, it is possible to use linear interpolation between known points. If the frequency f is $f_1 < f < f_2$ and the accuracy at the frequency $\epsilon(f)$ is $\epsilon(f_1) < \epsilon(f) < \epsilon(f_2)$, then the accuracy at f is found as (8).

$$\epsilon(f) = \frac{\epsilon(f_2) - \epsilon(f_1)}{f_2 - f_1}(f - f_1) + \epsilon(f_1) \tag{8}$$

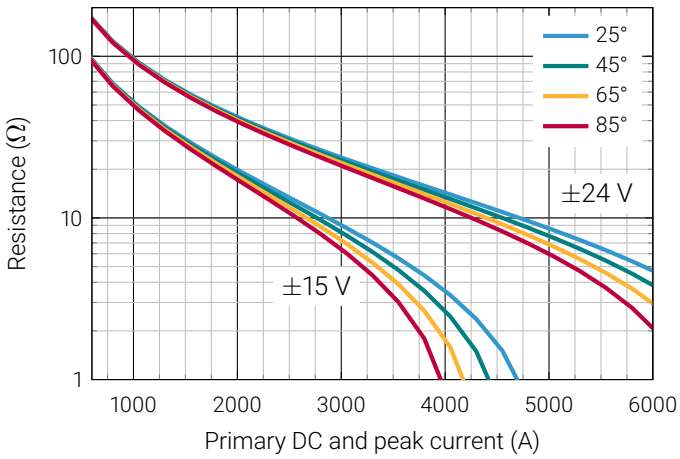

Figure 2: Maximum measurement resistor R_M vs. ambient temperatures and supply voltages

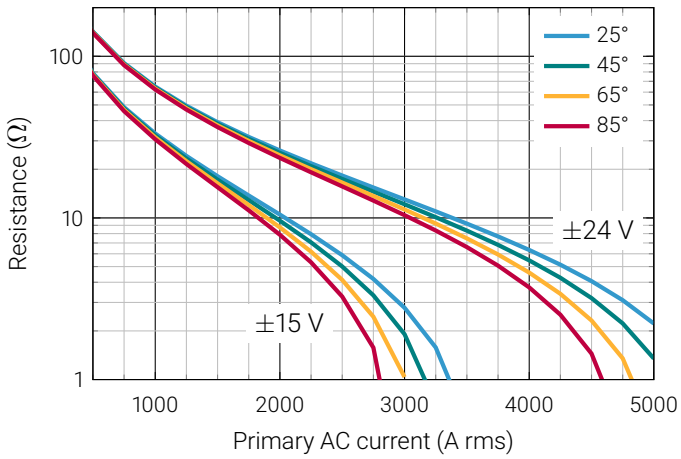

Figure 3: Maximum measurement resistor R_M vs. ambient temperatures and supply voltages

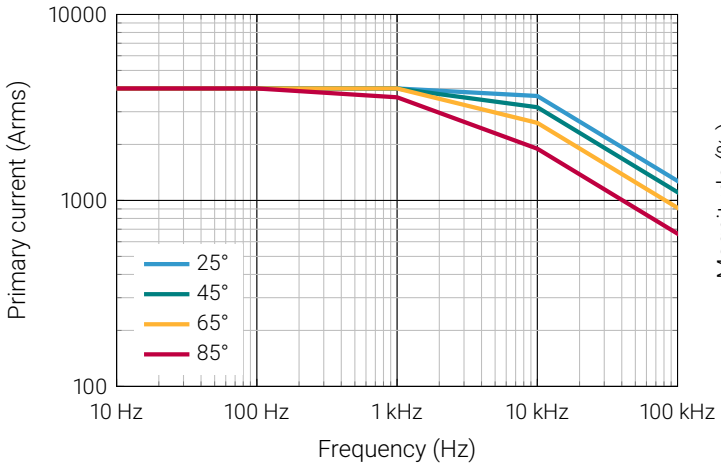

Figure 4: Maximum continuous primary current vs. frequency

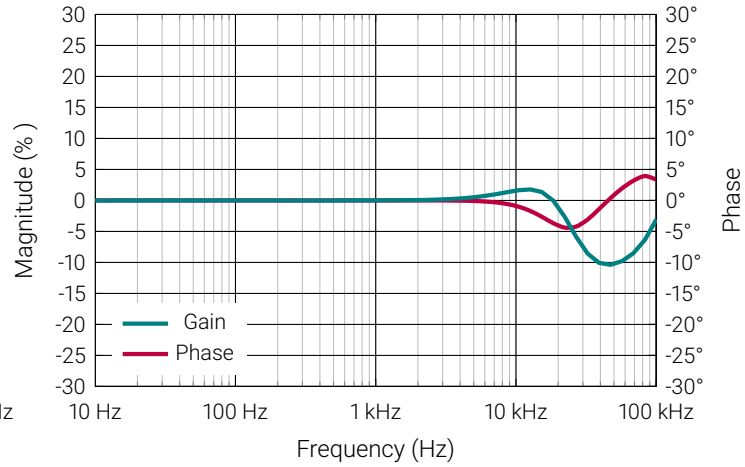

Figure 5: Frequency characteristics

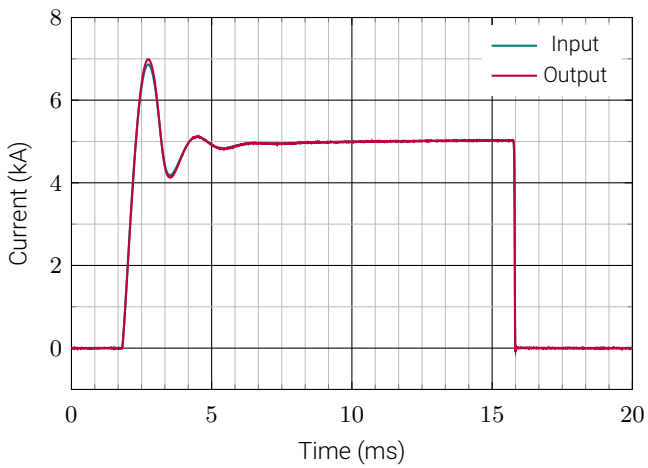

Figure 6: Tested step response. Slope: 10 A/µs

Isolation specifications according to IEC 61010-1

When using *REINFORCED insulated* wire, all wiring must be insulated for the highest voltage used. When using *BASIC insulated* or *uninsulated* wire, follow the specified voltages in the table below:

Parameter		Unit	Value
Clearance		mm	35.4
Creepage distance		mm	35.4
Comparative tracking index (CTI)		V	> 600
Continuous working voltage according to IEC 61010-1 with:			
Uninsulated wire:	CAT II (dc and rms)		3200
BASIC insulated wire:	CAT II (dc and rms)		6300
Uninsulated wire when chassis connected to PROTECTIVE EARTH. See dV/dt Shield Connection:	CAT II (dc and rms)		6300
According to standards	IEC 61010-1:2010/A1:2019 IEC 62477-1:2012 IEC 62109-1:2010 IEC 61800-5-1:2007/A1:2017/A11:2021		

Do not connect the transducer to signals or use for measurements within Measurement Category IV, or for measurements on MAINs circuits or on circuits derived from Overvoltage Category IV which may have transient overvoltages above what the product can withstand. The product must not be connected to circuits that have a maximum voltage above the continuous working voltage, relative to earth or to other channels, or this could damage and defeat the insulation.

Environmental and mechanical characteristics

Parameter	Unit	Min	Typ	Max	Comment
Altitude	m			2000	
Usage					Designed for indoor use
Pollution degree				2	
Operating temperature range	°C	-40		85	
Storage temperature range	°C	-40		85	
Relative humidity	%	20		80	Non-condensing
Ingress protection rating				IP20	
Mass	kg		4.3		
Cleaning					The transducer should only be cleaned with a damp cloth with isopropyl alcohol. No detergent or chemicals should be used.

Temperature

When multiple primary turns are used or high primary currents are applied the temperature around the transducer will increase, please monitor to ensure that the maximum ratings are not exceeded. It is recommended to have minimum 1 mm^2 per ampere in the primary bus bar.

Device safety and compliance

External devices connected to current transducers must comply with the standards IEC61010-1 and IEC62368-1 and be energy-limited circuitry. Device compliant with following standards:

EMC:	EN 61326-1:2013-2021
Safety:	IEC 61010-1:2010/A1:2019
Random vibration:	IEC 60068-2-64
Sinusiodal vibration:	IEC 60068-2-6
Shock:	IEC 60068-2-27

Advanced Sensor Protection Circuits "ASPC"

Developed to protect the current transducer from typical fault conditions:

- Unit is un-powered and secondary circuit is open or closed
- Unit is powered and secondary circuit is open or interrupted

Both DC and AC primary current up to 100% of nominal value can be applied to the current transducers in the above situations without damage to the electronics. Please notice that the transducer core can be magnetized in all above cases, leading to a small change in output offset current.

⚠ Do not disassemble the unit, and do not use it when it is damaged. If the equipment is used in a manner not specified by the manufacturer, the protection provided by the equipment may be impaired.

Intended use

The MBC4000I is designed to measure current up to 6000 A, and be powered by a suitable energy-limited power supply. Please see the product manual: https://danisense.com/user-manual

Instruction for use

1. Do not power up the device before all cables are connected.
2. Place the primary conductor through the aperture of the transducer.
3. Connect a power/measurement cable between power supply and each sensor.
4. Connect a low impedance amperemeter, measuring resistor or power analyzer on the secondary output.
5. When all connections are secured - turn on power.
6. Allow the device to settle for 1 minute (To stabilize offset)
7. Apply primary current.

If the green status LED is not operating with all cables connected and the system powered up, disconnect power and contact Danisense for further instruction.

⚠ There is a risk of electrical shock if an uninsulated busbar with high voltages is touching the conductive parts of the transducer. Please ensure, before powering up the system, that no uninsulated wire can touch conductive parts.

Connections

The MBC4000I is intended to use a JST VHR-3N or JST VHR-3M type connector for external connections. The pinout is as shown in Fig. 7. The recommended connection diagram is shown in Fig. 8.

Pin 1)	V_S-
Pin 2)	Out
Pin 3)	V_S+

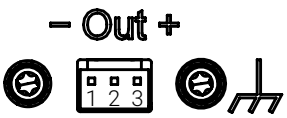

Figure 7: 3-pin external connector pin numbering

⚠ Please follow the polarity of the voltage supply to avoid damaging the device.

- The "V_S+" and "V_S-" must be connected to a suited DC powersupply (PSU) that meets the requirements stated in this datasheet.
- The "Out" connection is the secondary output current to be connected via a precision measuring resistor to the external PSU "0V" (GND).
- It is recommended that the measuring resistor R_M is connected as close to the PSU "0V" (GND) as possible to reduce common-mode (CM) measuring error.
- It is recommended to use a 4-point high precision measuring resistor R_m and a floating or differential input measuring unit for best precision with a high input impedance >1MΩ.
- It is important to twist or shield the wire-bundle connected to the transducer to minimize external coupling into the cable harness.
- The wires connected to the transducer "V_S+" and "V_S-" and "Out" must have a wire gauge of minimum 0.5mm^2 (AWG20) each.
- The recommended total wire harness resistance forward and back ("V_S+"/"V_S-" and "Out") is <500mΩ
- The voltage at the terminals of the transducer must be within the rated supply voltage.
- The wire harness must be routed and mechanically secured and isolated to ensure proper safety requirements and mechanical stress in the end-use installation.

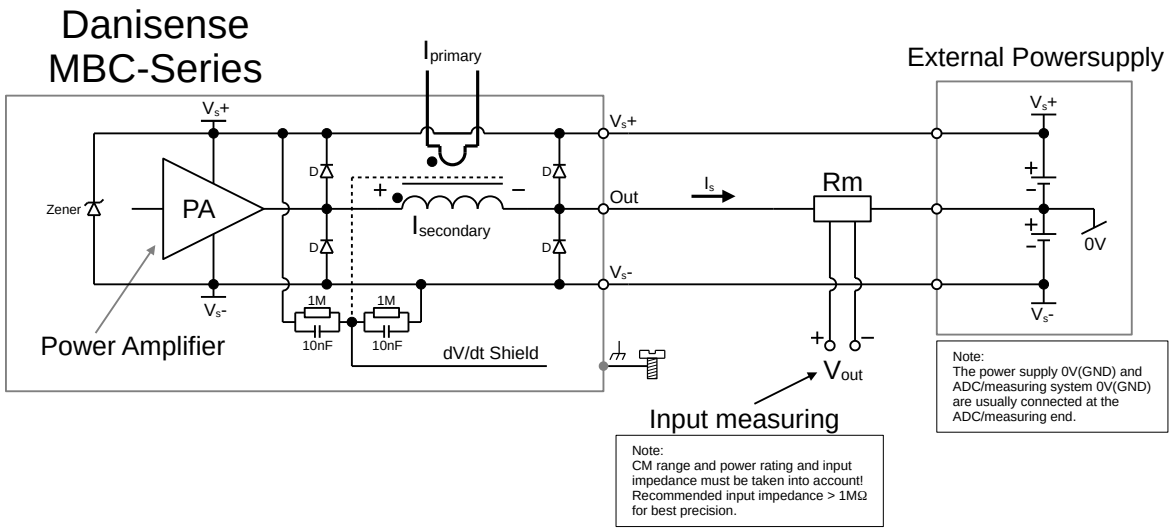

Figure 8: Connection diagram of 3-pin floating output and supply voltage

dV/dt Shield Connection

If measuring on primary conductors with high voltage transients, the dV/dt immunity can be increased by coupling the internal shield to a low impedance connection. The screw connection, marked with the "⏚" symbol, allows for such coupling. It is possible to couple the screw terminal to one of the following:

1) V_S-,
2) 0 V,
3) V_S+
4) Earth (protective earth), if the relative voltage between "0V" (GND) and Earth is less or equal to "V_S+" or "V_S−".

WHEN USING PROTECTIVE EARTH: Ensure that "0V"(GND) in the power supply does not differ significantly from protective earth, such that high voltages can build up between "0V"(GND) and protective earth. This can damage the device or create hazards. If using the shield connection as a protective earth, put a marking on the device to replace the "⏚" symbol with "⏚", and ensure proper wiring according to safety standards.

Overload capacity

The device is protected from overload by zener diodes as shown in Fig. 8, rated according to the table in Electrical specifications. Overload capacity can be increased if the connected power supply is able to absorb the induced overload secondary current pulse, to keep the supply voltages in the specified range. In this the case the limit is based on the power supply.

Busbar configuration

The best measurement performance is achieved with a centered primary conductor and ensuring a symmetric return path around the sensor, or keeping an appropriate distance D between the sensor and the return conductor, according to Fig. 9. The sensor is designed for horisontal alignment of the primary conductors. The distance D depends on the measured peak primary current with the relationship: $D = 300mm/I_{Peak} \cdot 6000$ A.

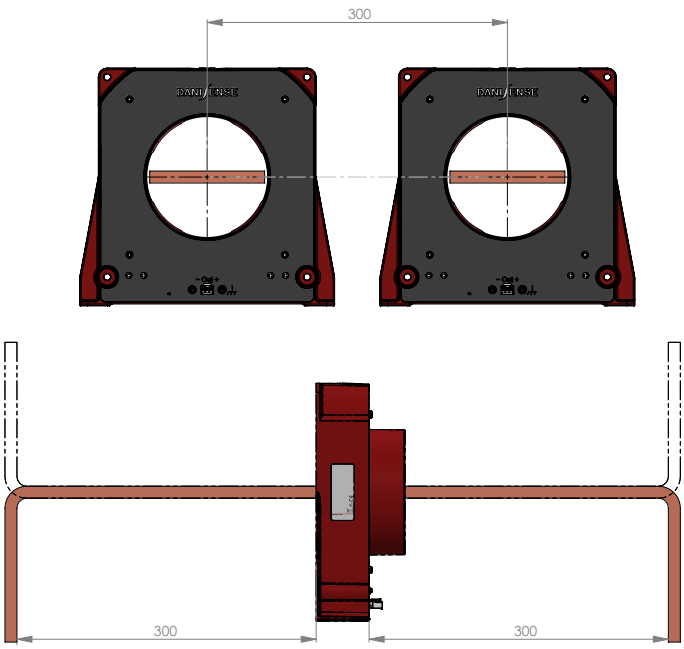

Figure 9: Recommended busbar distance (mm)

Mechanical Drawing

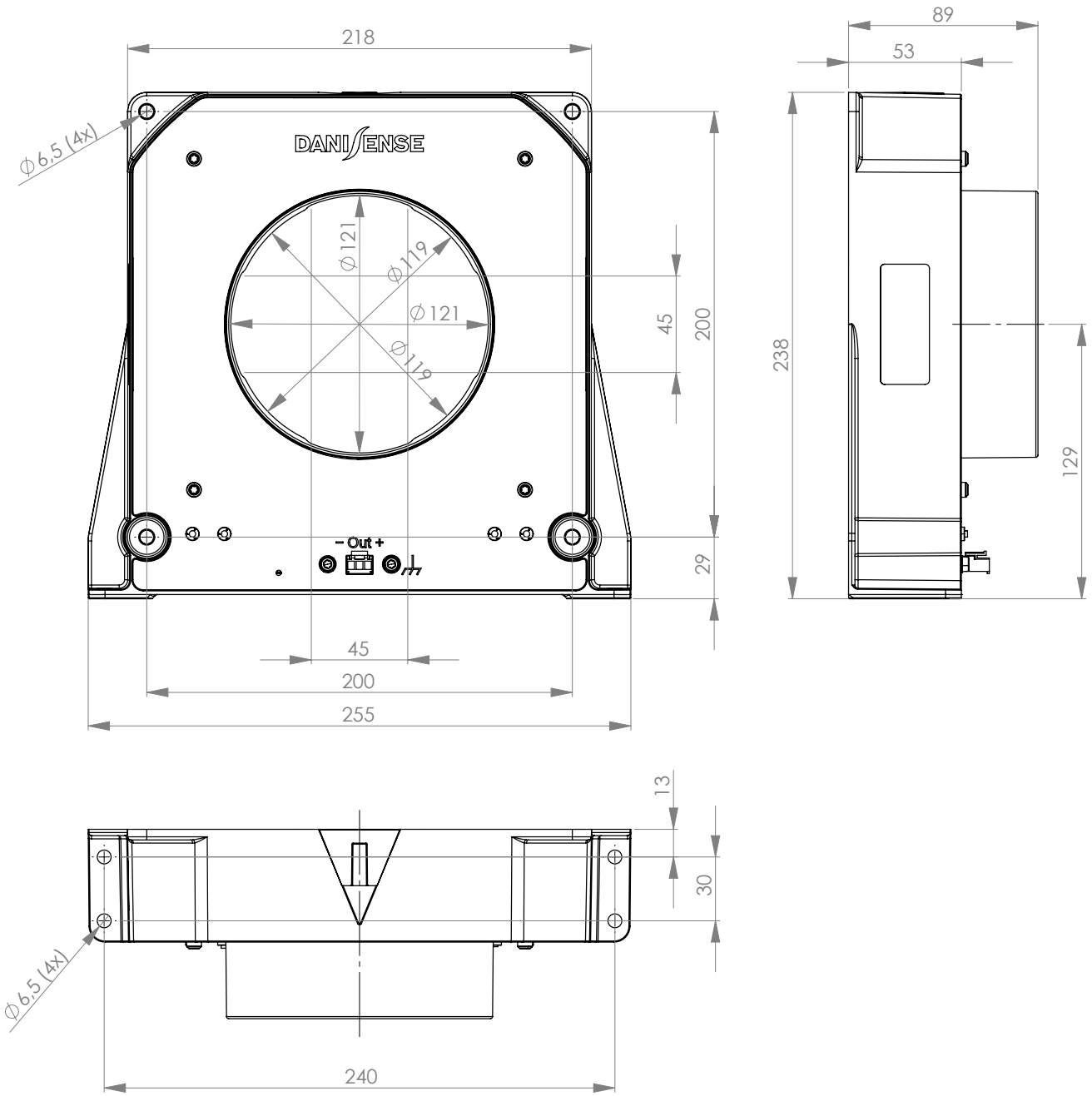

Figure 10: Dimensions of sensor. Tolerance is 0.3 mm.

Mounting

Base plate:	4 x M6 holes	6 Nm (with washer)
Back side:	4 x M6 holes	6 Nm (with washer)

Back plate mounting is recommended for vibrating environments.

Positive current direction

Is identified by an arrow on the top of the housing.